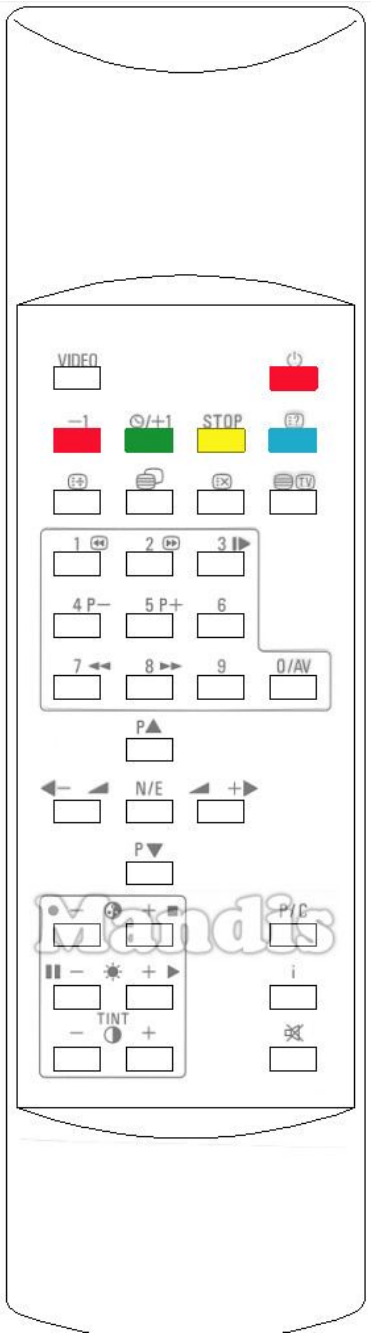

Originale		Sostituto	
	Power		Power
	Red	NETFLIX SEARCH	Red / Netflix / Search
	Green	APP REPEAT	Green / APP / Repeat
STOP	Yellow	YouTube REPEAT A-B	Yellow / YouTube / Repeat
	Blue	Prime Video RANDOM	Blue / Prime Video / Random
	[=+]	OPT-TOOLS SETUP	Setup / OPT /
	[/=]	RDS AV INPUT	AV / Input / RDS
	[=x]	FORMAT PICTURE	Picture / Format
	[=]	GOTO TEXT	Text / Goto
1	1	TV 1	1
2	2	DVD 2	2
3	3	CD - STB 3	3
4 P–	4	VIDEO 4	4
5 P+	5	TAPE 5	5
6	6	TUNER 6	6
7	7	AUX - HDD 7	7
8	8	USB 8	8

Originale		Sostituto	
9	9	BLUETOOTH 9	9
0/AV	0/AV	HDMI - SAT 0	0
P▲	P+	+ CH PAGE	CH+ / Page+
P▼	P-	CH PAGE –	CH- / Page-
◄ + ►	Vol+	+ VOL	Vol+
◄ – ◄	Vol-	VOL –	Vol-
N/E	N/E	OK	OK
◄ + ►	Right	►	Right
◄ – ◄	Left	◄	Left
P▲	Up	▲	Up
P▼	Down	▼	Down
P/C	P/C	RETURN BACK	Back / Return
i	i	ANGLE INFO	Info / Angle
	Mute	DIMMER MUTE	Mute / Dimmer
	Color-	TUNE- ◄◄	<< / Tune-
	Color+	TUNE+ ►►	>> / Tune+
	Brightness-	PRESET- ►►I	I<< / Preset-

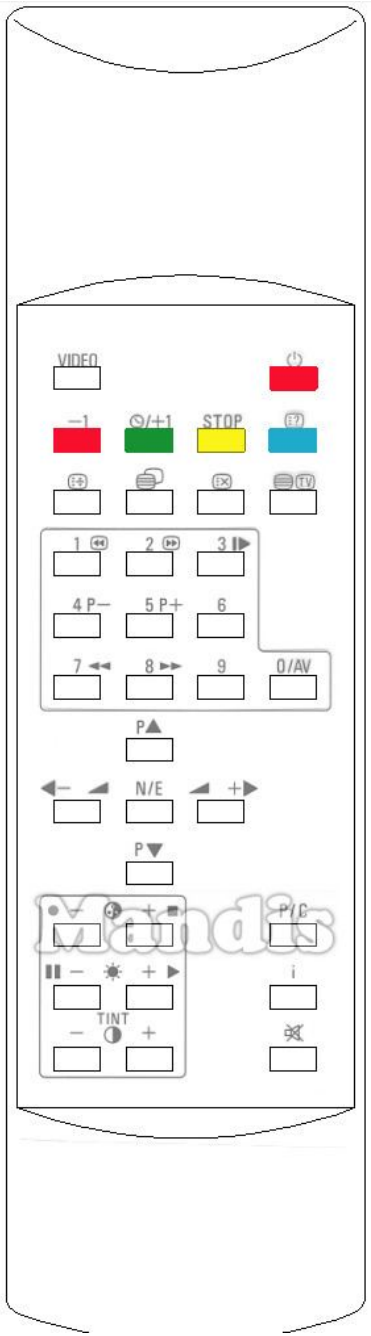

Originale	Sostituto	Originale	Sostituto
Brightness+	>>I / Preset+		
Tint-	Display / Media		
Tint+	Smart / List		

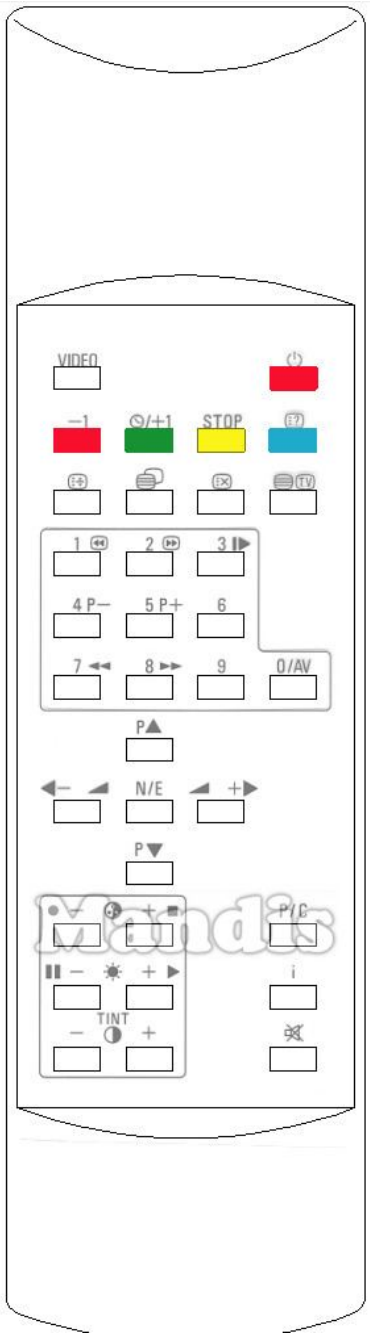

Originale	Sostituto	Originale	Sostituto
Power	Power	Rec	Rec / Rec Mode
Red	Red / Netflix / Search	Stop	Stop / Hold
Green	Green / APP / Repeat	Pause	Pause / Step / Freeze
Yellow	Yellow / YouTube / Repeat	Play	Play / Slow
Blue	Blue / Prime Video / Random	Tint-	Display / Media
0/AV	0	Tint+	Smart / List
Vol+	Vol+	<<	<< / Tune-
Vol-	Vol-	>>	>> / Tune+
P+	CH+ / Page+	I>	Zoom / Size
P-	CH- / Page-	I<<	I<< / Preset-
Down	Down	>>I	>>I / Preset+
Up	Up		
N/E	OK		
Right	Right		
Left	Left		
i	Info / Angle		
Mute	Mute / Dimmer		