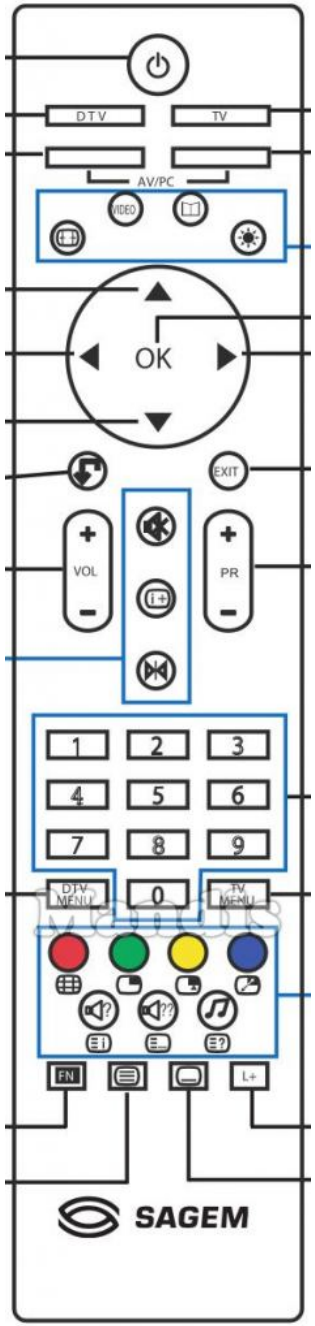

Originale	Sostituto
TV	Smart / List
DTV	Display / Media
Norm	Setup / OPT /
Audio 1	Audio / Lang I/II
TV Menu	Menu / Home
Brightness	Zoom / Size
0	0
1	1
2	2
3	3
4	4
5	5
6	6
7	7
8	8
9	9
Red	Red / Netflix / Search

Originale	Sostituto
Green	Green / APP / Repeat
Yellow	Yellow / YouTube / Repeat
Blue	Blue / Prime Video / Random
Sound	Sound / Title
Text	Text / Goto
Right	Right
AV	AV / Input / RDS
Aspect	Picture / Format
Video	Shift + 4
Guide	Guide / EPG / -/--
Up	Up
Left	Left
OK	OK
Power	Power
Down	Down
Back	Back / Return
Exit	Exit / Cancel / Clear

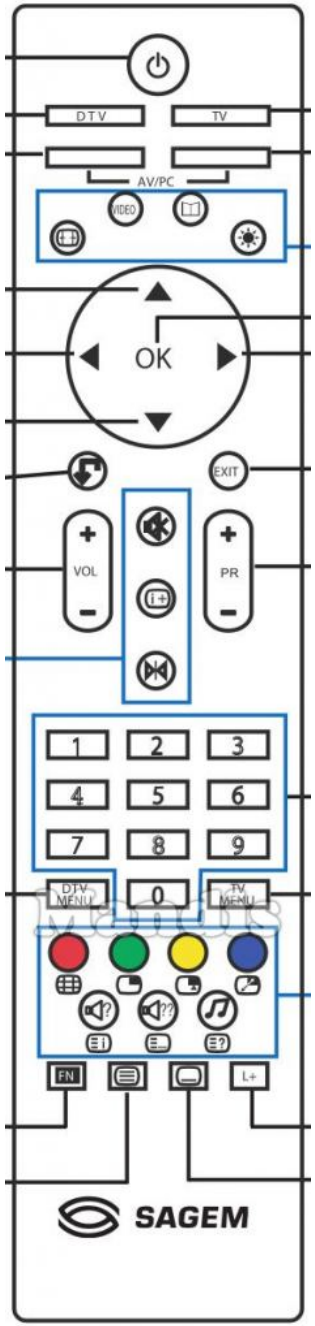

Originale	Sostituto	Originale	Sostituto
Vol +	Vol +		
Vol -	Vol -		
Mute	Mute / Dimmer		
PR+	CH+ / Page+		
PR-	CH- / Page-		

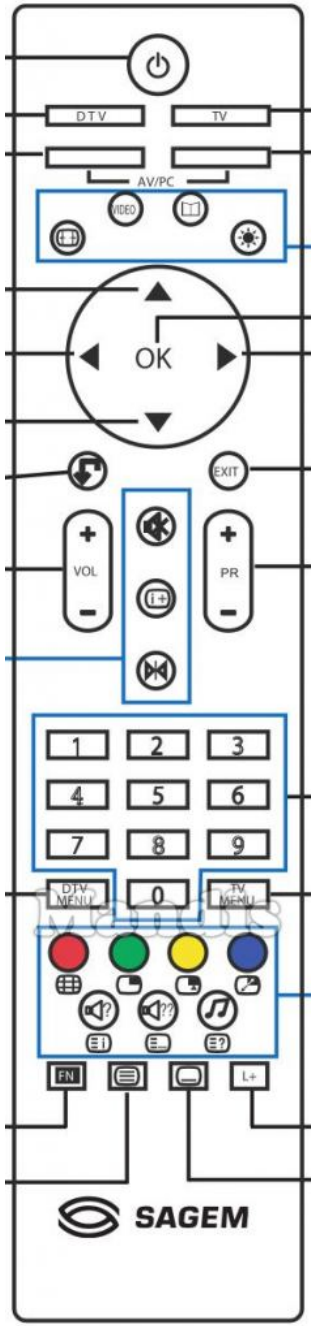

Originale		Sostituto	
	Power		Power
	DTV	MEDIA DISPLAY	Display / Media
	TV	LIST SMART	Smart / List
	AV	RDS AV INPUT	AV / Input / RDS
	Video	SHIFT + VIDEO 4	Shift + 4
	Guide	-/-- GUIDE EPG	Guide / EPG / -/--
	Aspect	FORMAT PICTURE	Picture / Format
	Brightness	SIZE ZOOM	Zoom / Size
	Up		Up
	Left		Left
OK	OK	OK	OK
	Right		Right
	Down		Down
	Back	RETURN BACK	Back / Return
	Exit	CLEAR EXIT CANCEL	Exit / Cancel / Clear
	Vol +	+ VOL	Vol +
	Mute	DIMMER MUTE	Mute / Dimmer

Originale		Sostituto	
	PR+	+ CH PAGE	CH+ / Page+
	Vol -	VOL −	Vol -
	PR-	CH PAGE −	CH- / Page-
	Norm	OPT-TOOLS SETUP	Setup / OPT /
1	1	TV 1	1
2	2	DVD 2	2
3	3	CD-STB 3	3
4	4	VIDEO 4	4
5	5	TAPE 5	5
6	6	TUNER 6	6
7	7	AUX-HDD 7	7
8	8	USB 8	8
9	9	BLUETOOTH 9	9
DTV MENU	DTV Menu	HOME MENU	Menu / Home
DTV MENU	DTV Menu	TOP MENU D.MENU	D. Menu / Top
0	0	HDMI-SAT 0	0
	Red	NETFLIX SEARCH	Red / Netflix / Search

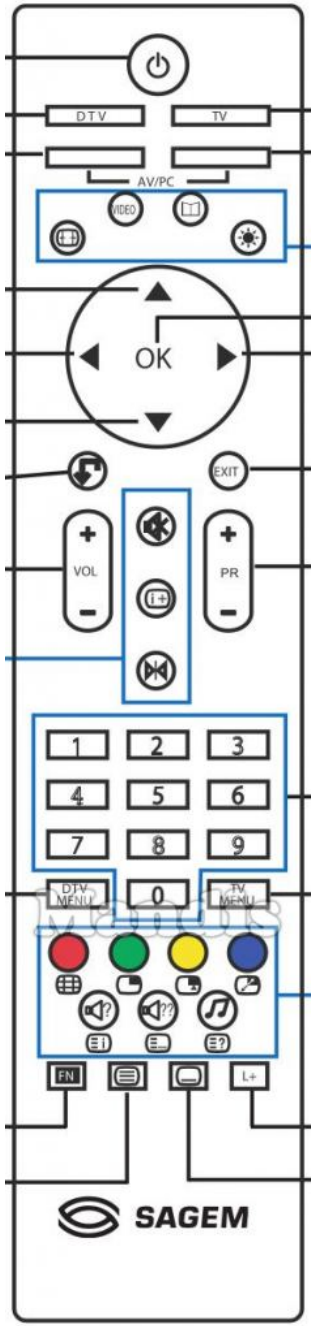

Originale	Sostituto	Originale	Sostituto
Green	APP REPEAT — Green / APP / Repeat		
Yellow	YouTube REPEAT A-B — Yellow / YouTube / Repeat		
Blue	Prime Video RANDOM — Blue / Prime Video / Random		
Audio 1	LANG I/II AUDIO — Audio / Lang I/II		
Sound	TITLE SOUND — Sound / Title		
Text	GOTO TEXT — Text / Goto		